REVISIONS				
ZONE	REV	DESCRIPTION	DATE	APPROVED
–	NC	INITIAL RELEASE		

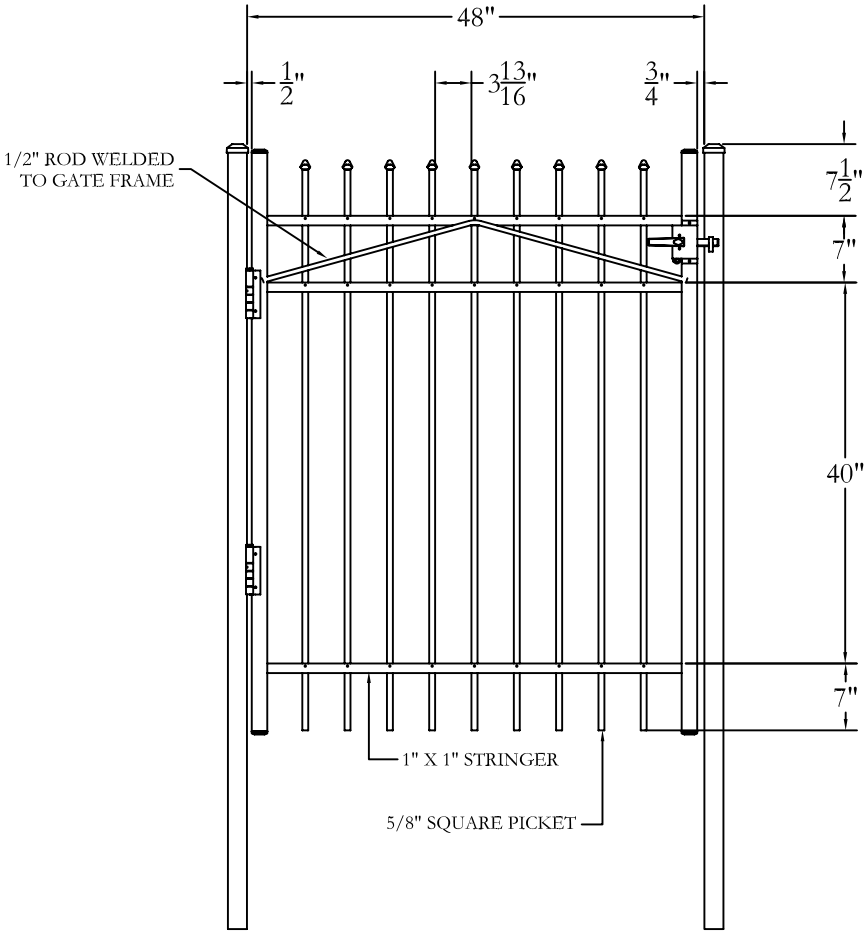

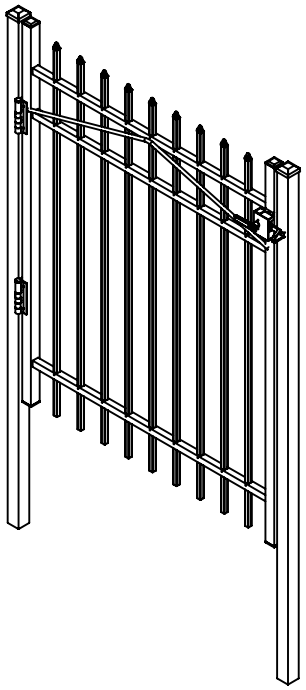

Jerith® Manufacturing Co., Inc.
Philadelphia, PA 19154
(800)344–2242

DRAWING:
RESIDENTIAL GATE
STYLE #101
60" HIGH X 48" WIDE

SIZE	DWG NO.	REV
D	RS60U10148	NC
SCALE	DATE 1-1-05	SHEET 1 OF 1

© 2005. This drawing may not be altered or reproduced without the permission of Jerith Manufacturing Co., Inc.